PROJECT REFERENCE NO.	SHEET NO.
5B.207314.4	EC-3
R/W SHEET NO.	
ROADWAY DESIGN ENGINEER	HYDRAULICS ENGINEER

ROADSIDE ENVIRONMENTAL UNIT
DEPARTMENT OF TRANSPORTATION
DIVISION OF HIGHWAYS
RALEIGH, N.C.

2018 STANDARD SPECIFICATIONS
DRAWINGS NOT DRAWN TO SCALE

OPTION 1

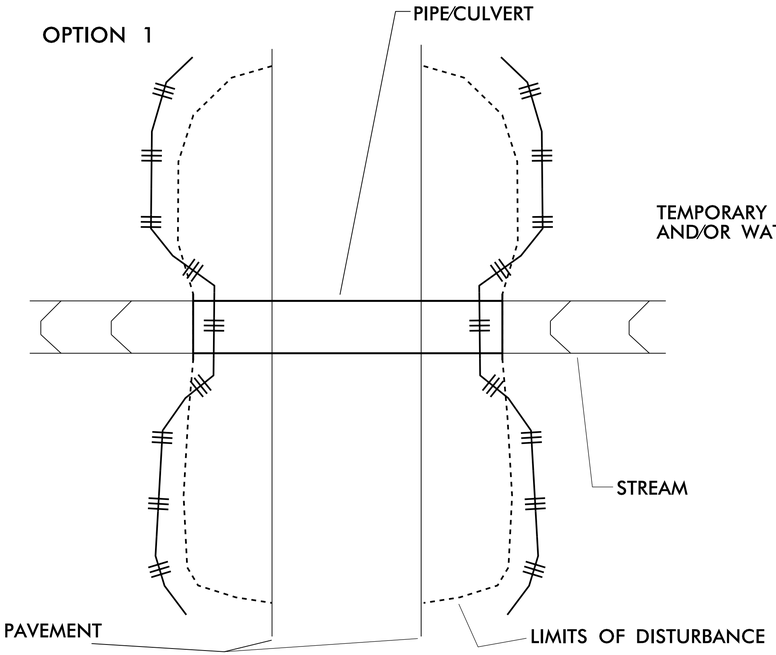

OPTION 2
(WHERE ROADSIDE DITCHES ARE PRESENT)

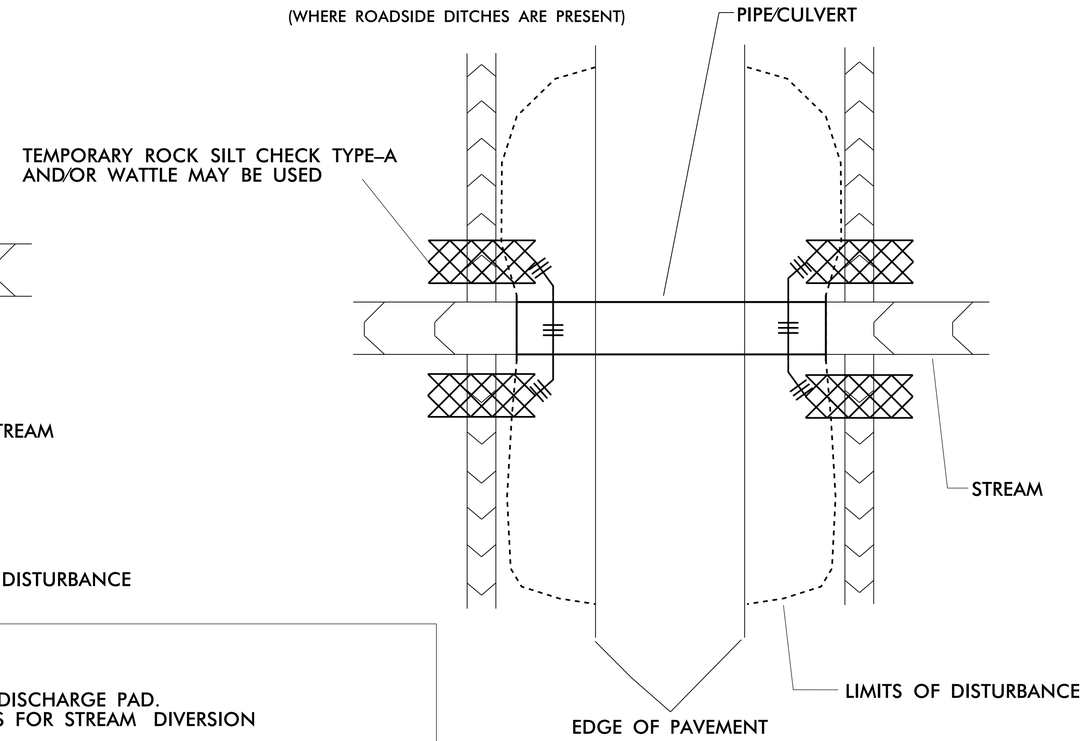

LEGEND:

- IMPERVIOUS DIKE
- PUMP
- SPECIAL STILLING BASIN
- STABILIZED DISCHARGE PAD (GEOTEXTILE)
- EOP — EDGE OF PAVEMENT
- ETF — EXISTING TRANSPORTATION FACILITY (ROW)
- TEMPORARY ROCK SILT CHECK TYPE–A AND/OR WATTLE
- TEMPORARY SILT FENCE

SEQUENCE OF CONSTRUCTION FOR TYPICAL WORK AREA:

1. INSTALL SPECIAL STILLING BASIN.
2. INSTALL UPSTREAM PUMP, TEMPORARY FLEXIBLE HOSE, AND STABILIZED DISCHARGE PAD.
3. PLACE UPSTREAM IMPERVIOUS DIKE AND BEGIN PUMPING OPERATIONS FOR STREAM DIVERSION DISCHARGING ONTO STABILIZED OUTLET PAD.
4. PLACE DOWNSTREAM IMPERVIOUS DIKE AND PUMPING APPARATUS. DEWATER WORK ZONE. AREA TO BE DEWATERED SHALL BE EQUAL TO ONE DAY'S WORK.
5. INSTALL PIPE(S), STREAM BED STABILIZATION, AND SLOPE STABILIZATION AS DIRECTED.
6. EXCAVATE ANY ACCUMULATED SILT AND DEWATER BEFORE REMOVAL OF IMPERVIOUS DIKES. REMOVE IMPERVIOUS DIKES, PUMPS, TEMPORARY FLEXIBLE HOSE, AND STABILIZED DISCHARGE PAD. (DOWNSTREAM IMPERVIOUS DIKES FIRST).
7. REMOVE SPECIAL STILLING BASIN AND RESTORE AREA TO ORIGINAL CONDITIONS.
8. STABILIZE ALL DISTURBED AREAS THROUGHOUT PROJECT WITH SEED AND MATTING FOR EROSION CONTROL.

NOTES:

INSTALL EROSION CONTROL MEASURES PRIOR TO ANY EARTH DISTURBING ACTIVITIES.
INSTALL SPECIAL SEDIMENT CONTROL FENCE BREAKS OR TEMPORARY ROCK SILT CHECKS. TYPE–A AT LOW POINTS IN SILT FENCE.
FOR OPTION 1 INSTALL SILT FENCE SUCH THAT ALL EARTH DISTURBANCE IS CONTAINED.
FOR CULVERT CONSTRUCTION SEQUENCING SEE THE PUMP AROUND DETAIL OR CONSULT "BEST MANAGEMENT PRACTICES FOR CONSTRUCTION AND MAINTENANCE ACTIVITIES".
ALL EXCAVATION IN JURISDICTIONAL STREAMS SHALL BE PERFORMED IN ONLY DRY OR ISOLATED SECTIONS OF THE WORK ZONE.
IMPERVIOUS DIKES ARE TO BE USED TO ISOLATE WORK FROM STREAM FLOW WHEN NECESSARY.
MAINTENANCE OF STREAM FLOW OPERATIONS SHALL BE INCIDENTAL TO THE WORK.
THIS INCLUDES THE DISCHARGE PAD, DIVERSION PIPES, PUMPS, AND HOSES.
PUMPS AND HOSES SHALL BE OF SUFFICIENT SIZE TO MAINTAIN STREAM FLOW AND TO DEWATER THE WORK AREA.
INSTALL SPECIAL STILLING BASIN IN VEGETATED AREA WITHIN RIGHT OF WAY. DISCHARGE SHOULD BE DIRECTED THROUGH VEGETATED BUFFER AWAY FROM WORK SITE.
INSTALL SILT FENCE AS DIRECTED TO CONTAIN DISTURBED AREAS AND/OR EXCAVATED STOCKPILES.
BORROW MATERIAL FROM OR DISPOSAL OF MATERIAL TO ANY UNPERMITTED SITE WILL REQUIRE A RECLAMATION PLAN.
INSTALL PIPE(S) IN JURISDICTIONAL AREAS IN ACCORDANCE WITH NCDOT BEST MANAGEMENT PRACTICES FOR CONSTRUCTION AND MAINTENANCE ACTIVITIES MANUAL.

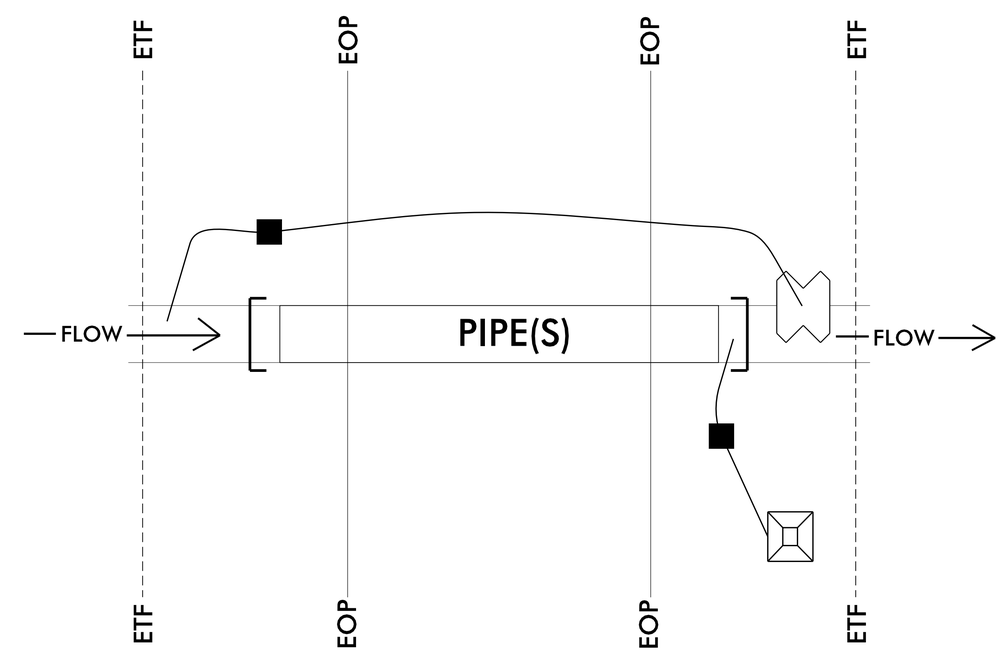

PUMP-AROUND OPERATION FOR PIPE REPLACEMENT IN JURISDICTIONAL STREAMS EROSION CONTROL DETAIL